Saguatti
www.saguatti.it

ART. 401/60

Revolving door knobs in brass with an expansion square (mm.8) spindle in galvanised steel.

- Finishes:

Polished brass code **L**

PVD coated brass **P**

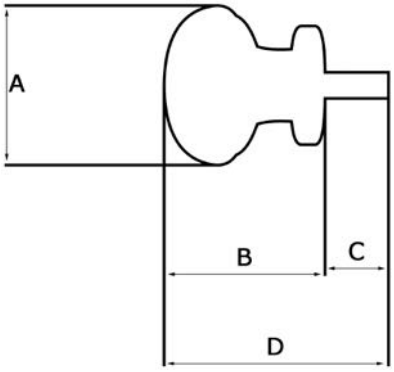

Expansion square spindle

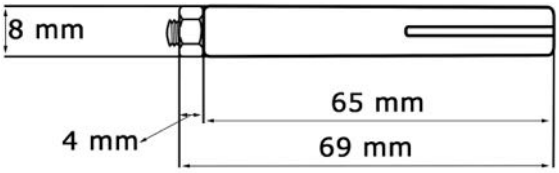

ARTICLE	A	B	C	D
401/60	60	54	min : 36 max : 47	min : 90 max : 101

Measurements in mm.
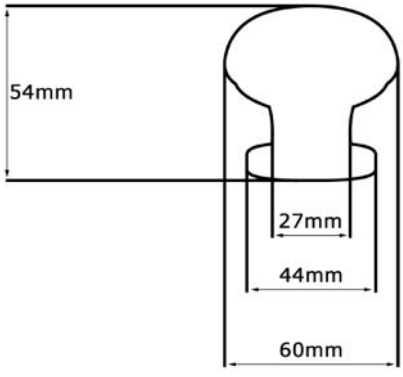
Other specific measurements of the door knob